EXITA SERIES

EXIT/EMERGENCY LED LIGHTING

"EXIT" Letters Exit Signs

The EXITA "EXIT" letters series are Exit or Emergency LED lighting fixtures that come with a variety of options and two material finishes; aluminum and thermoplastic. In addition to square or round combo head options, the "EXIT" letters can be either on a single face or on both faces. Available for indoor or outdoor applications.

Application: Stairwells | Hallways | Offices | Commercial Spaces

eralux®

	DATE	QTY	TYPE
PROJECT			
PN			
NOTES			

EXITA SERIES – "EXIT" LETTERS

INDOOR	CR-7108R	CR-7037R	CR-7082RX	CR-7105R
OUTDOOR	CR-7110	CR-7111CR	CR-7111SR	

PRODUCT CERTIFICATIONS

RoHS

UL CERTIFIED LOOK FOR THE UL MARK FOR DETAILS

2 YEARS WARRANTY

SYSTEM WARRANTY – 2 YEARS

Eralux will warrant defective drivers, LEDs and boards for 2 years from the date of purchase. This warranty is valid only if the fixture is installed and used as per installation guides and specifications. If a defect is present, Eralux will send drivers and boards at no fee with a thorough replacement instructions along with instructions on the return of the defective parts back to Eralux.

ERALUX Inc. All Rights Reserved. Any information provided is subject to change without notice. All values are typical values when measured under normal laboratory conditions.

EXITA SERIES – CR-7108R

EXIT/EMERGENCY LED LIGHTING

Aluminum | Edge-Lit

eralux®

SPECIFICATIONS

Input Voltage	120/347V
Power Factor	>0.9
Total Harmonic Distortion	<20%
Power	1.2W
Housing	Aluminum
Finish	Silver
Configuration	High grade acrylic diffuser, with fully illuminated 6” characters
Ambient Temperature Range	0 °C to 40°C
Mounting Options	Wall | Ceiling | End
Letter Color	Red
Charging Time	24 hours
Discharging Time	120 minutes
Battery	Maintenance-free 4.8V NiCad
Application	Damp locations
Protections	Flame retardant | fire resistant
Compliant	UL-924 NFPA 101 Life Safety Code NEC OSHA CEC Title 20 Compliant

MOUNTING OPTIONS

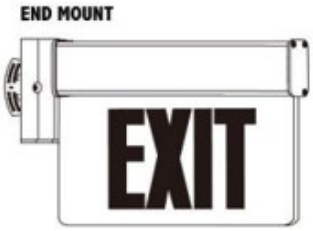

DIMENSIONS

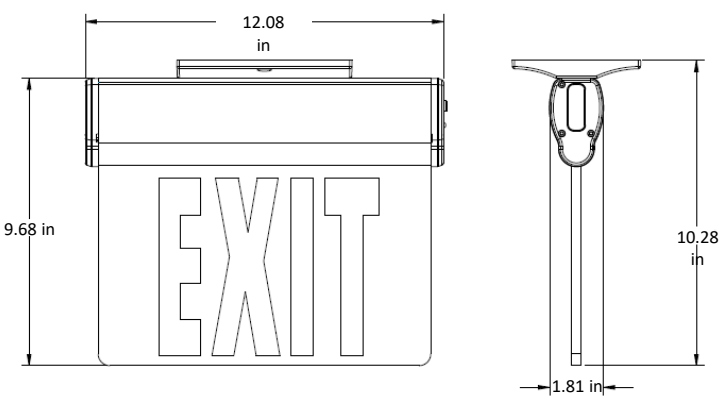

ERALUX Inc. All Rights Reserved. Any information provided is subject to change without notice. All values are typical values when measured under normal laboratory conditions.

EXITA SERIES – CR-7037R

EXIT/EMERGENCY LED LIGHTING

Thermoplastic

eralux®

SPECIFICATIONS

Input Voltage	120/277V
Power Factor	>0.9
Total Harmonic Distortion	<20%
Power	1.2W
Housing	Thermoplastic
Finish	Powder Coated White
Configuration	Field-selectable sing/double-face Fully illuminated 6” characters
Ambient Temperature Range	0 °C to 40°C
Mounting Options	Wall | Ceiling | End
Letter Color	Red
Charging Time	24 hours
Discharging Time	90 minutes
Battery	Maintenance-free 1.2V NiCad
Application	Damp locations
Protections	Flame retardant | fire resistant
Compliant	UL-924 NFPA 101 Life Safety Code NEC OSHA CEC Title 20 Compliant

MOUNTING OPTIONS

Ceiling Mount

End Mount

DIMENSIONS

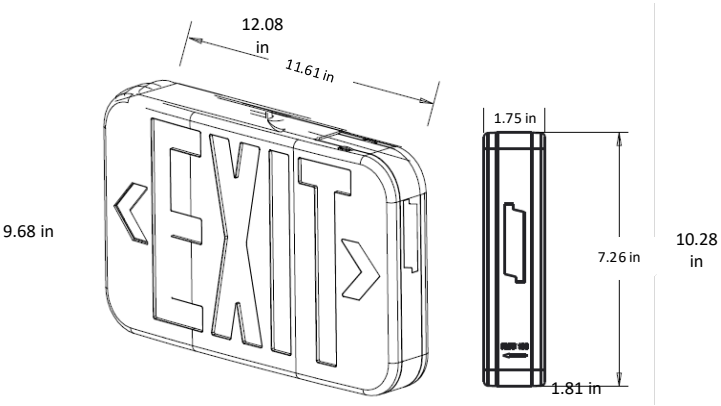

ERALUX Inc. All Rights Reserved. Any information provided is subject to change without notice. All values are typical values when measured under normal laboratory conditions.

EXITA SERIES – CR-7082RX

EXIT/EMERGENCY LED LIGHTING

Thermoplastic | Square Combo Heads

eralux®

SPECIFICATIONS

Input Voltage	120/277V
Power Factor	>0.9
Total Harmonic Distortion	<20%
Power	1.2W
Combo Head Power	1.2W/head | 2.4W total
Combo Head	Fully adjustable
Housing	Thermoplastic
Finish	Powder Coated White
Configuration	Field selectable single/double face Fully illuminated 6” characters
Ambient Temperature Range	0 °C to 40°C
Mounting Options	Wall | Ceiling
Letter Color	Red
Charging Time	24 hours
Discharging Time	90 minutes
Battery	Maintenance-free 3.6V NiCad
Application	Damp locations
Protections	Flame retardant | fire resistant
Compliant	UL-924 NFPA 101 Life Safety Code NEC OSHA CEC Title 20 Compliant

MOUNTING OPTIONS

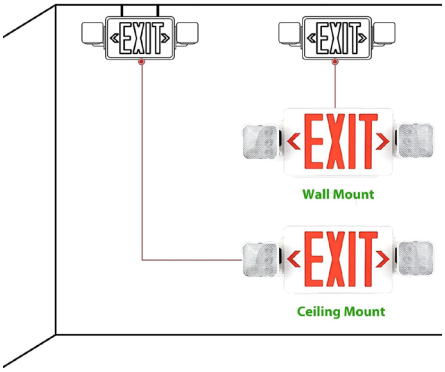

ADJUSTABLE COMBO HEAD

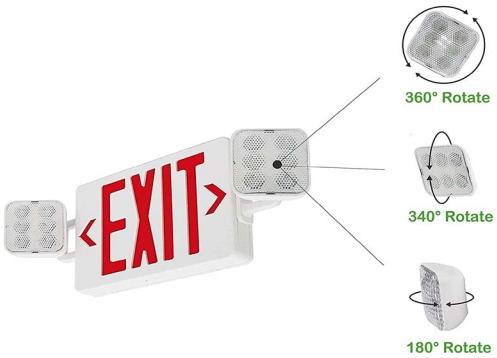

DIMENSIONS

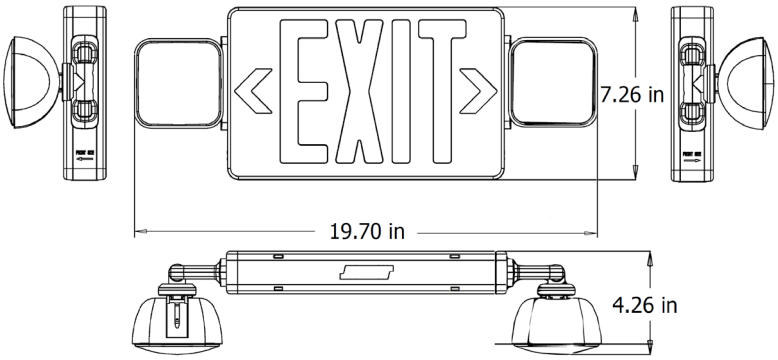

ERALUX Inc. All Rights Reserved. Any information provided is subject to change without notice. All values are typical values when measured under normal laboratory conditions.

EXITA SERIES – CR-7105R

EXIT/EMERGENCY LED LIGHTING

Thermoplastic | Round Combo Heads

eralux®

SPECIFICATIONS

Input Voltage	120/277 V
Power Factor	>0.9
Total Harmonic Distortion	<20%
Power	1.2W
Combo Head Power	1W/head | 2W total
Combo Head	Fully adjustable
Housing	Thermoplastic
Finish	Powder Coated White
Configuration	Field selectable single/double face Fully illuminated 6” characters
Ambient Temperature Range	0 °C to 40°C
Mounting Options	Wall | Ceiling
Letter Color	Red
Charging Time	24 hours
Discharging Time	90 minutes
Battery	Maintenance-free 3.6V NiCad
Application	Damp locations
Protections	Flame retardant | fire resistant
Compliant	UL-924 NFPA 101 Life Safety Code NEC OSHA CEC Title 20 Compliant

MOUNTING OPTIONS

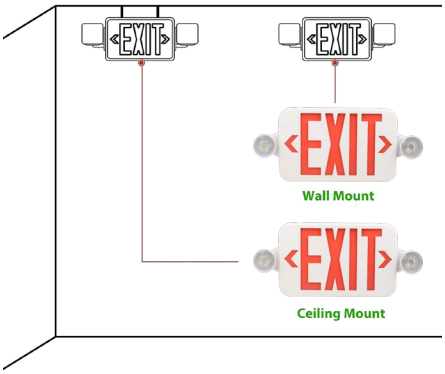

ADJUSTABLE COMBO HEAD

DIMENSIONS

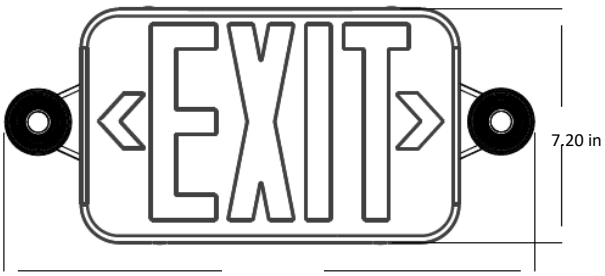

ERALUX Inc. All Rights Reserved. Any information provided is subject to change without notice. All values are typical values when measured under normal laboratory conditions.

EXITA SERIES – CR-7110

EXIT/EMERGENCY LED LIGHTING

Thermoplastic | Outdoors

eralux®

SPECIFICATIONS

Input Voltage	120/347 V
Power Factor	>0.9
Total Harmonic Distortion	<20%
Power	1.2W
Housing	Thermoplastic
Finish	Powder Coated White
Configuration	Field selectable single/double face Fully illuminated 6” letters
Ambient Temperature Range	0 °C to 40°C
Mounting Options	Wall | Ceiling | End
Letter Color	Switchable Red/Green
Charging Time	24 hours
Discharging Time	90 minutes
Battery	Maintenance-free 1.2V NiCad
Application	Outdoors
Protections	Flame retardant | Fire resistant IP65; wet and corrosion resistance
Compliant	UL-924 for Wet Locations NFPA 101 Life Safety Code NEC OSHA CEC Title 20 Compliant

DIMENSIONS

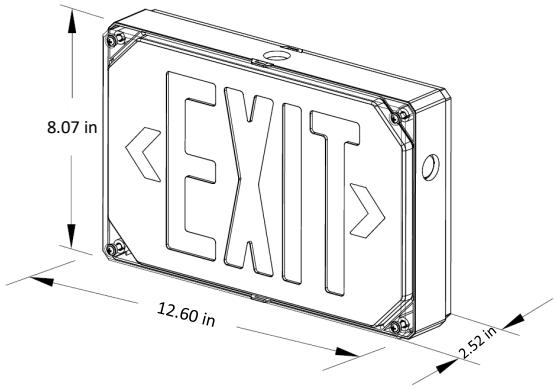

ERALUX Inc. All Rights Reserved. Any information provided is subject to change without notice. All values are typical values when measured under normal laboratory conditions.

EXITA SERIES – CR-7111CR

EXIT/EMERGENCY LED LIGHTING

Thermoplastic | Round Combo Heads | Outdoors

eralux®

SPECIFICATIONS

Input Voltage	120/277 V
Power Factor	>0.9
Total Harmonic Distortion	<20%
Power	2W
Combo Head Power	1.4W/head | 2.8W total
Combo Head	Fully adjustable
Housing	Thermoplastic
Finish	Powder Coated White
Configuration	Field selectable single/double face Fully illuminated 6” letters
Ambient Temperature Range	0 °C to 40°C
Mounting Options	Wall | Ceiling | End
Letter Color	Red
Charging Time	24 hours
Discharging Time	90 minutes
Battery	Maintenance-free 3.6V NiCad
Application	Outdoors
Protections	Flame retardant | Fire resistant IP65; wet and corrosion resistance
Compliant	UL-924 for Wet Locations NFPA 101 Life Safety Code NEC OSHA CEC Title 20 Compliant

DIMENSIONS

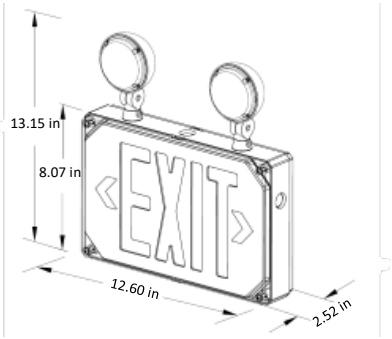

PHOTOMETRIC DATA

ZONAL LUMEN SUMMARY			POLAR LUMINOUS INTENSITY GRAPH
ZONE	**LUMENS**	**% OF FIXTURE**	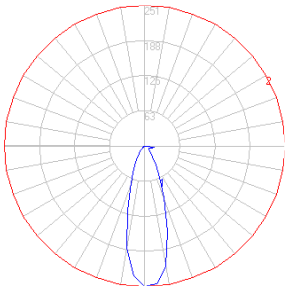
0-20°	62.42	50.6	
0-30°	88.92	72.1	
0-40°	102.44	83.1	
0-60°	113.72	92.2	
0-80°	121.58	98.6	
0-90°	123.09	99.8	

ERALUX Inc. All Rights Reserved. Any information provided is subject to change without notice. All values are typical values when measured under normal laboratory conditions.

EXITA SERIES – CR-7111SR

EXIT/EMERGENCY LED LIGHTING

Thermoplastic | Square Combo Heads | Outdoors

eralux®

SPECIFICATIONS

Input Voltage	120/277 V
Power Factor	>0.9
Total Harmonic Distortion	<20%
Power	2W
Combo Head Power	1.2W/head | 2.4W total
Combo Head	Fully adjustable
Housing	Thermoplastic
Finish	Powder Coated White
Configuration	Field selectable single/double face Fully illuminated 6” letters
Ambient Temperature Range	0 °C to 40°C
Mounting Options	Wall | Ceiling | End
Letter Color	Red
Charging Time	24 hours
Discharging Time	90 minutes
Battery	Maintenance-free 3.6V NiCad
Application	Outdoors
Protections	Flame retardant | Fire resistant IP65; wet and corrosion resistance
Compliant	UL-924 for Wet Locations NFPA 101 Life Safety Code NEC OSHA CEC Title 20 Compliant

DIMENSIONS

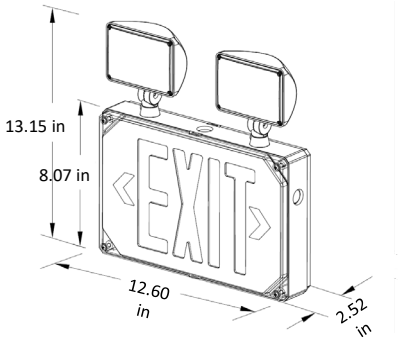

PHOTOMETRIC DATA

ZONAL LUMEN SUMMARY			POLAR LUMINOUS INTENSITY GRAPH
ZONE	**LUMENS**	**% OF FIXTURE**	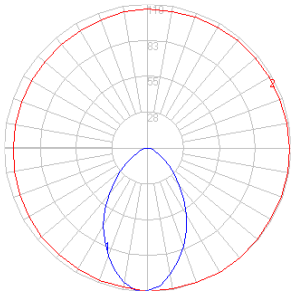
0-20°	35.78	23.2	
0-30°	68.55	44.4	
0-40°	99.85	64.7	
0-60°	137.81	89.3	
0-80°	151.68	98.3	
0-90°	154.13	99.9	

ERALUX Inc. All Rights Reserved. Any information provided is subject to change without notice. All values are typical values when measured under normal laboratory conditions.